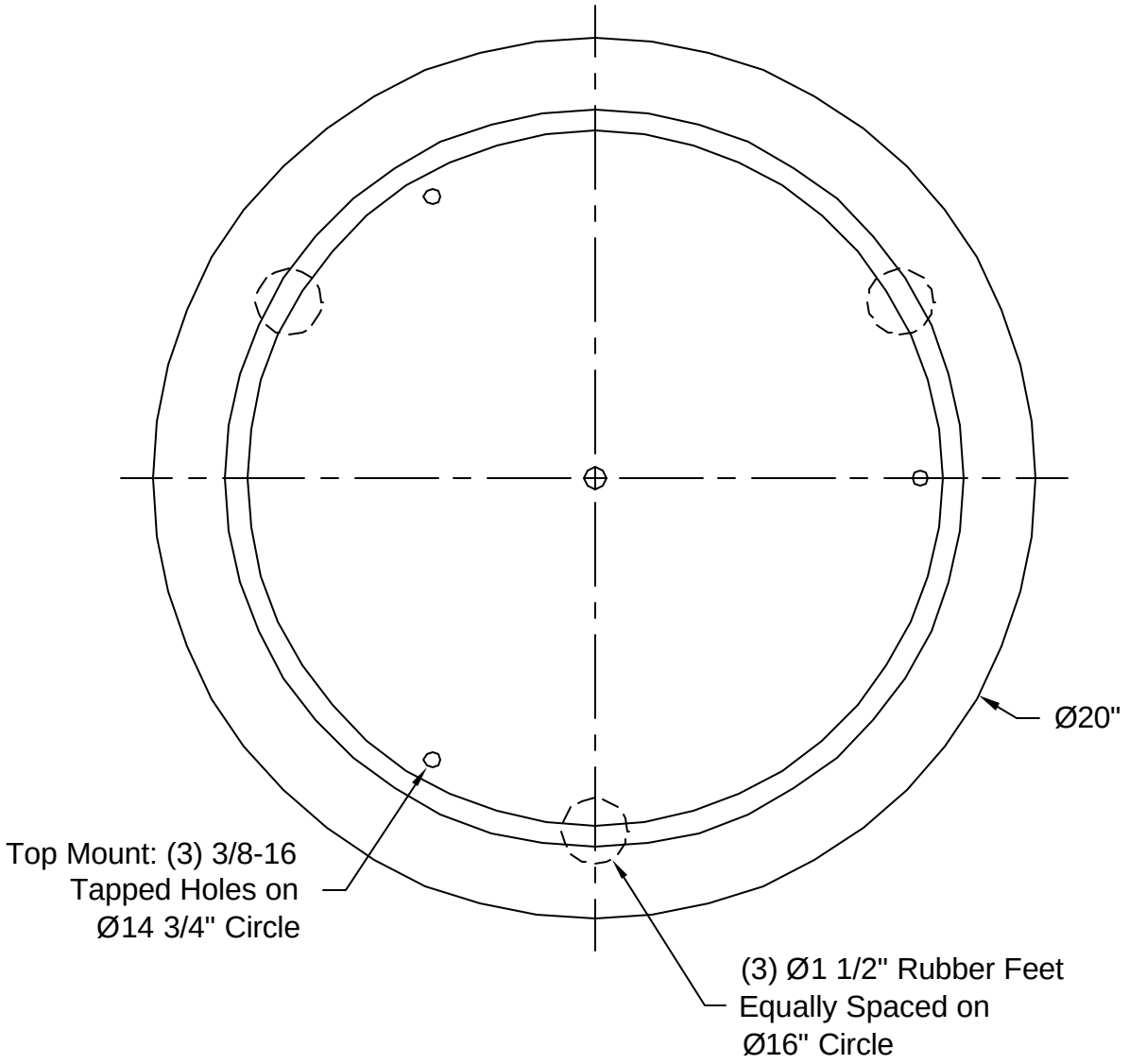
Ø20"
Top Mount: (3) 3/8-16
Tapped Holes on
Ø14 3/4" Circle
(3) Ø1 1/2" Rubber Feet
Equally Spaced on
Ø16" Circle

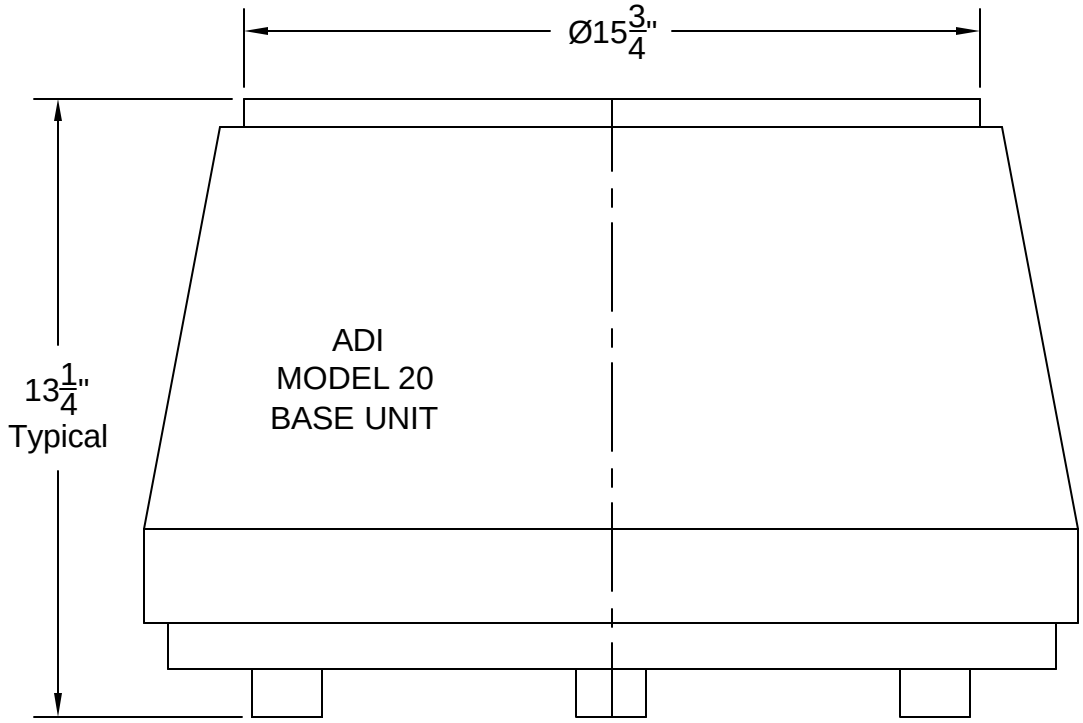
Ø15 3/4"
13 1/4"
Typical
ADI
MODEL 20
BASE UNIT