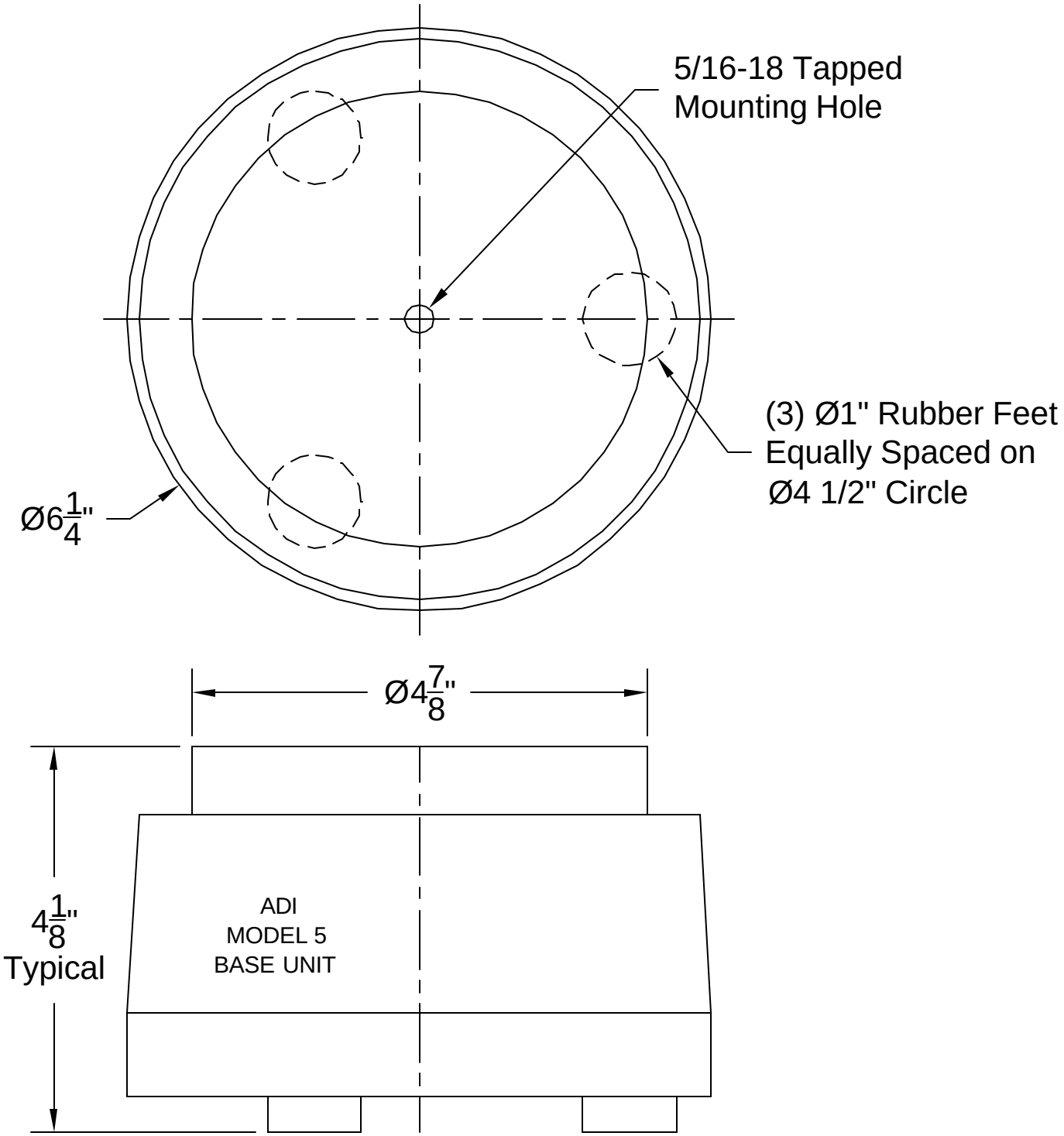
5/16-18 Tapped
Mounting Hole
(3) Ø1" Rubber Feet
Equally Spaced on
Ø4 1/2" Circle
Ø6 1/4"
Ø4 7/8"
4 1/8"
Typical
ADI
MODEL 5
BASE UNIT