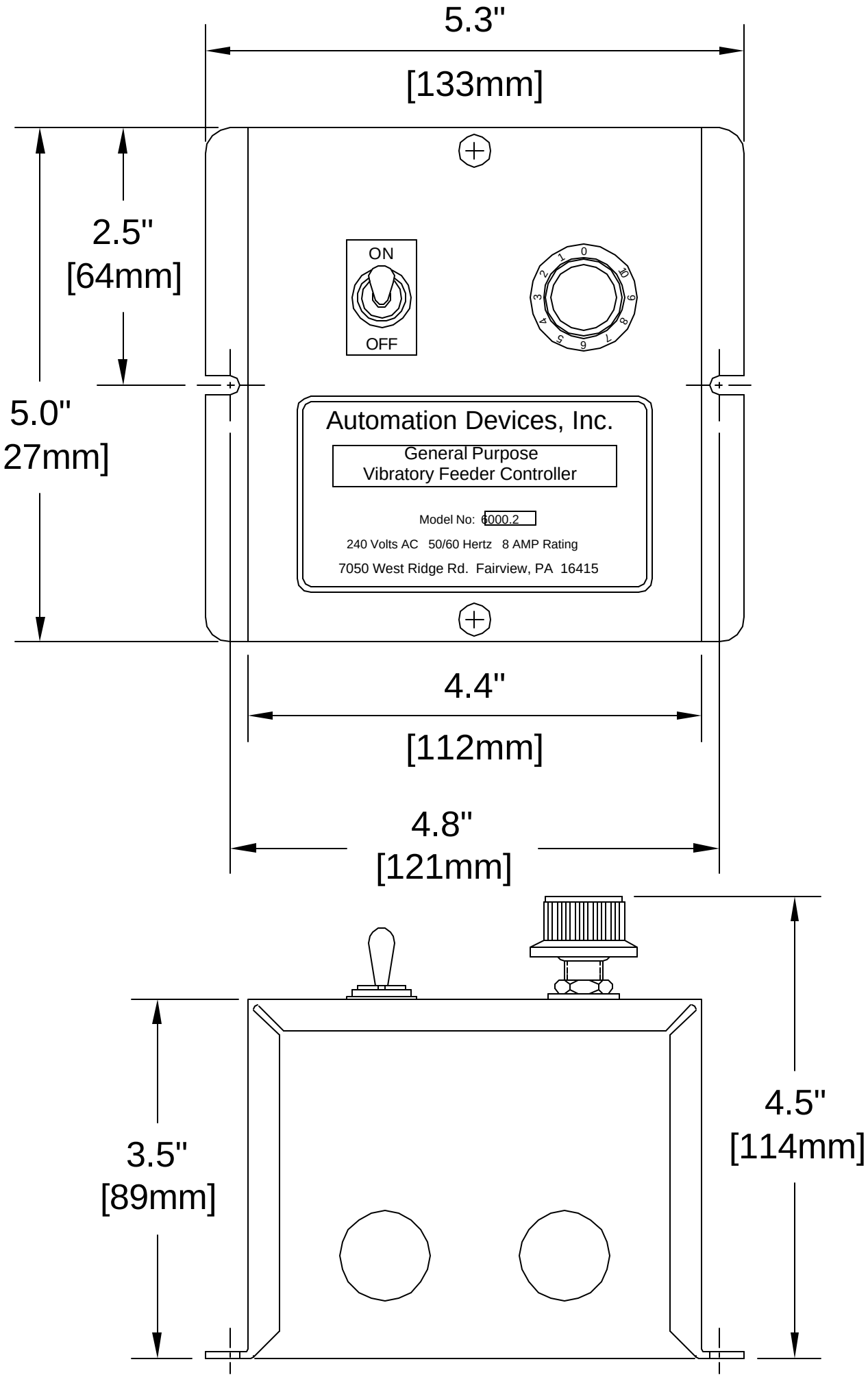
5.3"
[133mm]
2.5"
[64mm]
5.0"
27mm]
ON
OFF
0
10
9
8
7
6
5
4
3
2
1
Automation Devices, Inc.
General Purpose
Vibratory Feeder Controller
Model No: 6000.2
240 Volts AC 50/60 Hertz 8 AMP Rating
7050 West Ridge Rd. Fairview, PA 16415
4.4"
[112mm]
4.8"
[121mm]
3.5"
[89mm]
4.5"
[114mm]